OMEGA SECUR PANELS MOUNTED ON SQUARE POSTS (HEIGHT 4')

PANNEAUX OMEGA SECUR SUR POTEAUX CARRÉS (GRANDEUR 4')

Panel / Panneau 4' (34 lb/15.4 kg)

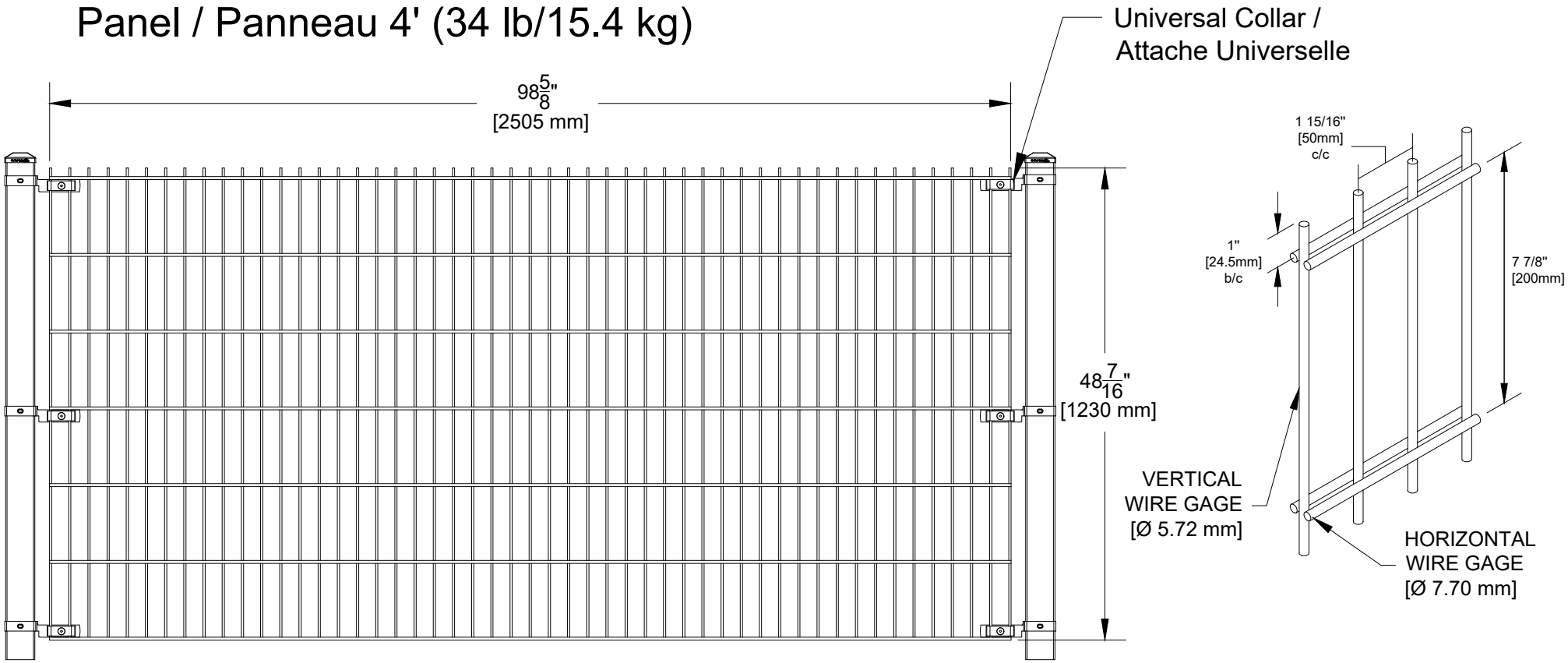

SYSTÈMES DE CLÔTURES omega II FENCE SYSTEMS

Omega II Fence Systems
1735, Blvd. St-Elzéar West
Laval, Quebec
H7L 3N6

Tel: 450-686-9600
1-800-836-6342
Fax: 450-681-5318
www.omegafence.com

WEB

REVISION : 12/21