OMEGA GABION FRAMED BENCH WITH ELITE OR EVOLUTION PANELS

4' GABION FRAMED BENCH

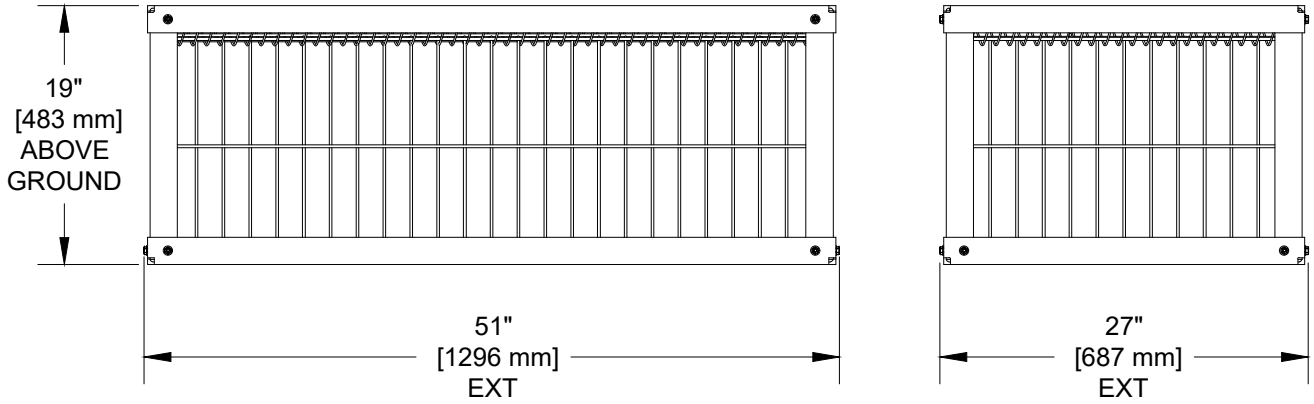

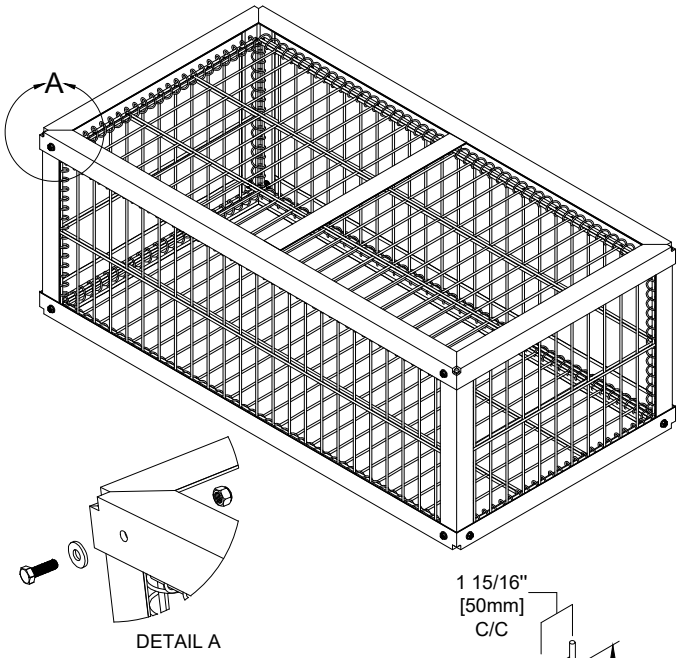

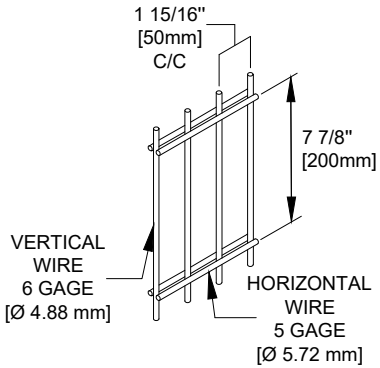

6' GABION FRAMED BENCH

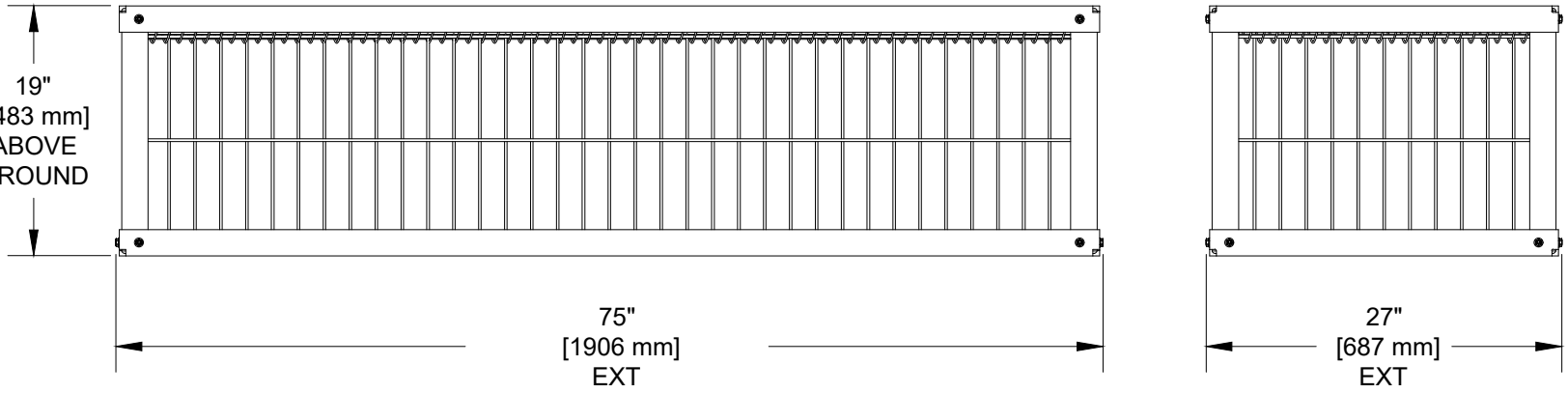

GABION BENCH WIDTH	PRODUCT NUMBER
4'	C-GBFEL48K**XX**
6'	C-GBFEL72K**XX**

XX	FINISH
BK	Black
SP	Special color
GV	Galvanized

ELITE PANEL: PAINTED FINISH
EVOLUTION PANEL: HOT-DIPPED GALVANIZED FINISH

FOR MORE INFORMATION ON THESE PANELS, PLEASE REFER TO SPECIFICATIONS.

SYSTÈMES DE CLÔTURES omega II FENCE SYSTEMS

Omega II Fence Systems
1735, Blvd. St-Elzéar West
Laval, Quebec
H7L 3N6

Tel: 450-686-9600
1-800-836-6342
Fax: 450-681-5318
www.omegafence.com

WEB

REVISION : 05/26