OMEGA GABION FENCE WITH ELITE OR EVOLUTION PANELS ON SQUARE POSTS

4' GABION FENCE

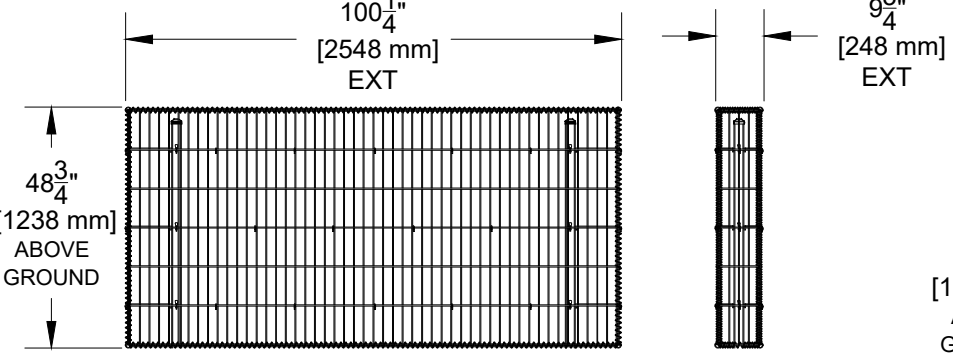

6' GABION FENCE

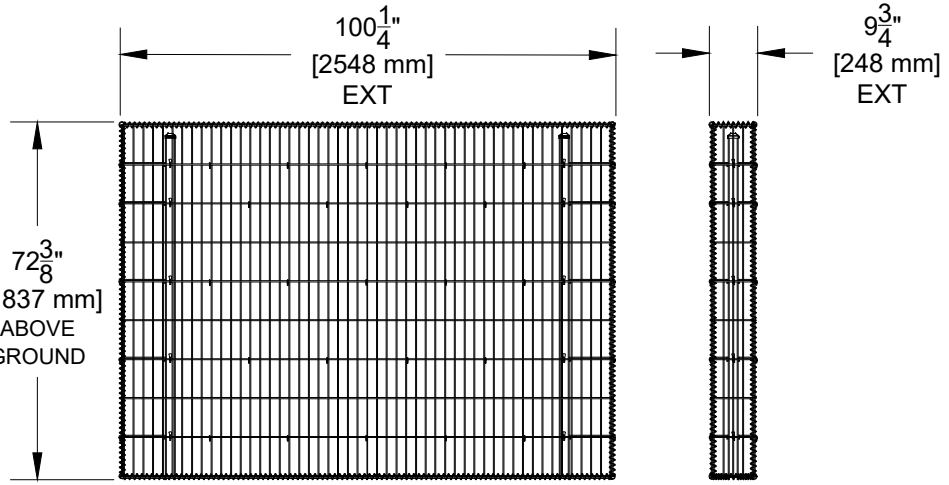

8' GABION FENCE

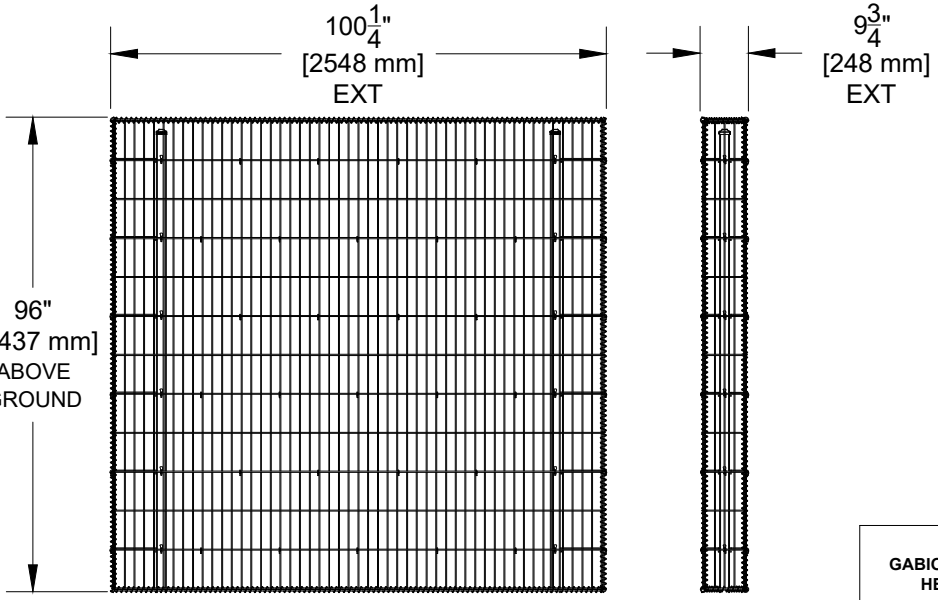

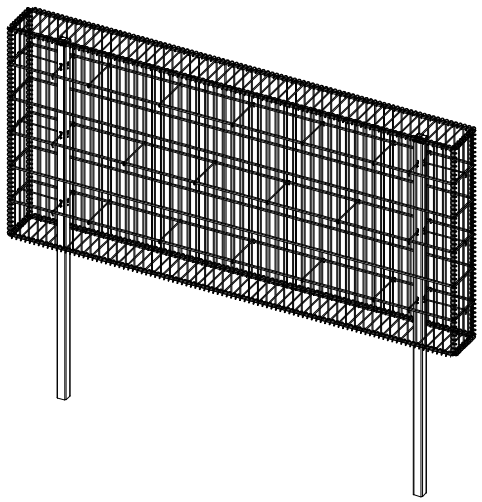

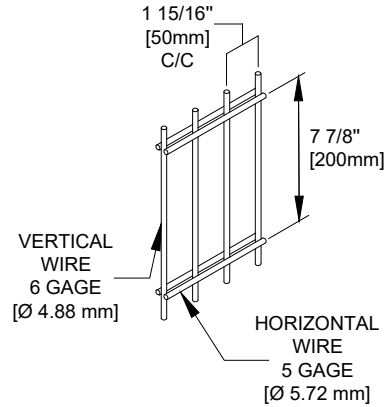

GABION FENCE HEIGHT	PRODUCT NUMBER	GABION SPIRAL (C-GSPINDLESS) QUANTITY	9" HOOKS KIT (C-GHKPPK9SS) QUANTITY	4" HOOKS KIT (C-GHK2PK9SS) QUANTITY
4'	C-GFEL48K**XX**	7	3	2
6'	C-GFEL72K**XX**	8	4	3
8'	C-GFEL96K**XX**	9	5	3

XX	FINISH
BK	Black
SP	Special color
GV	Galvanized

ELITE PANEL: PAINTED FINISH
EVOLUTION PANEL: HOT-DIPPED GALVANIZED FINISH

FOR MORE INFORMATION ON THESE PANELS, PLEASE REFER TO SPECIFICATIONS.

SYSTÈMES DE CLÔTURES omega II FENCE SYSTEMS

Omega II Fence Systems
1735, Blvd. St-Elzéar West
Laval, Quebec
H7L 3N6

Tel: 450-686-9600
1-800-836-6342
Fax: 450-681-5318
www.omegafence.com

WEB

REVISION : 08/26