OMEGA GABION FENCE LINE WITH SQUARE MESH PANELS ON SQUARE POSTS

4' GABION FENCE LINE

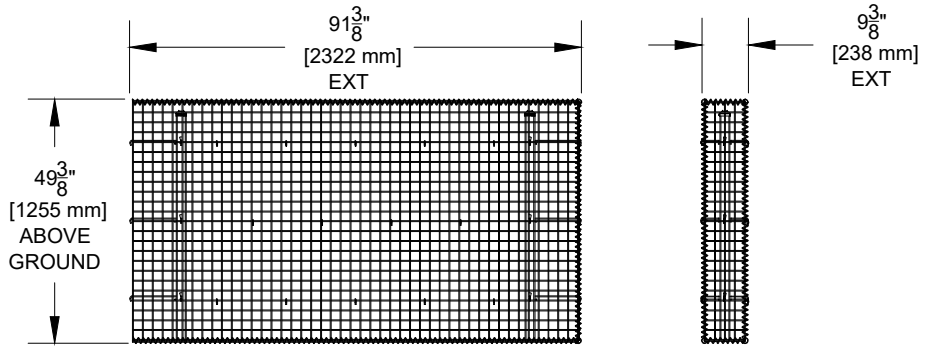

6' GABION FENCE LINE

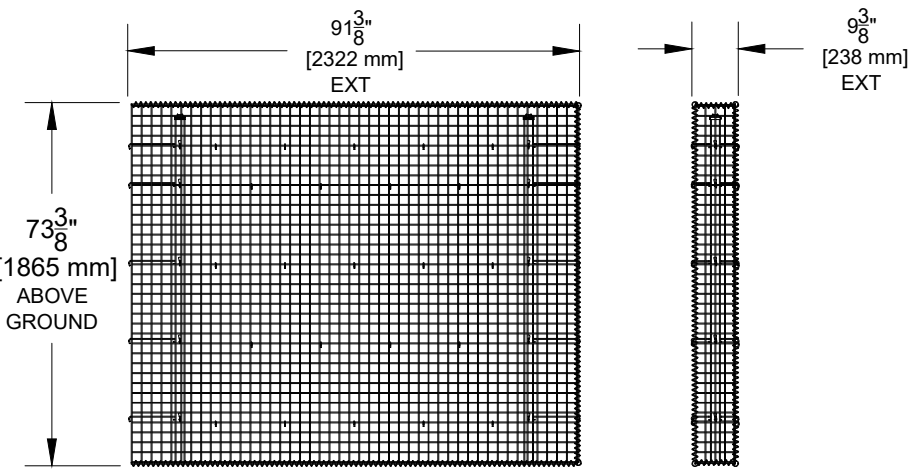

8' GABION FENCE LINE

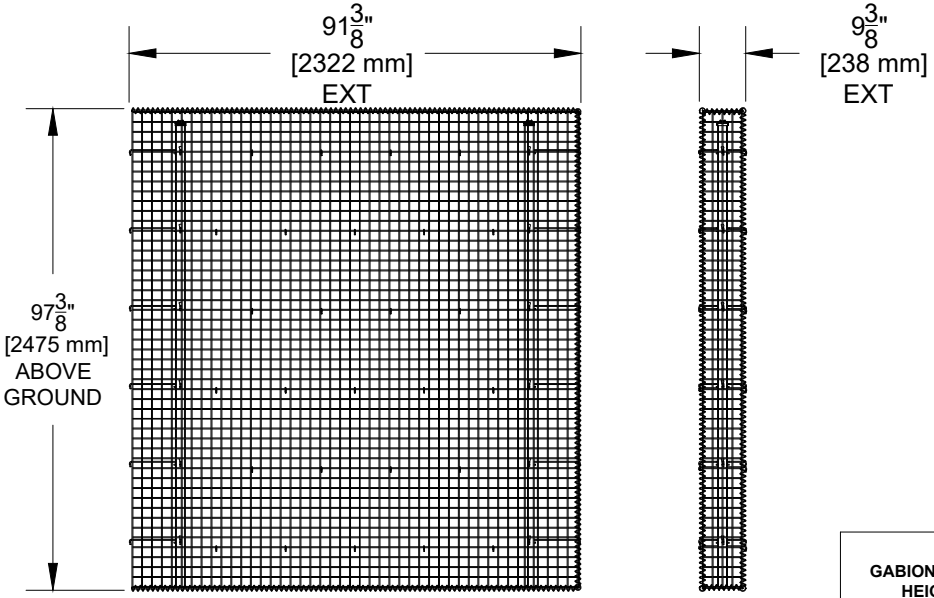

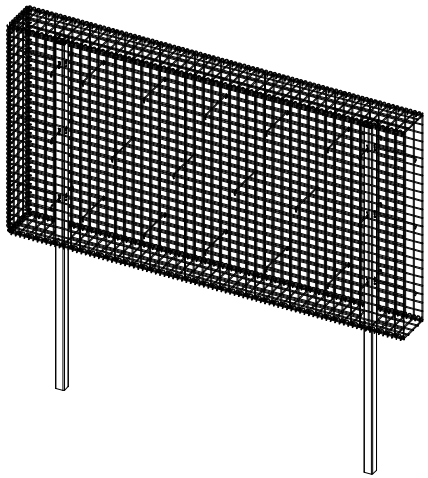

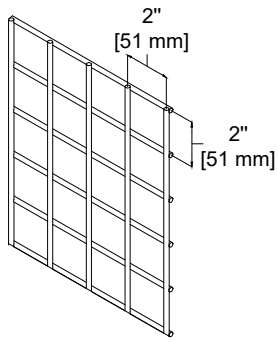

GABION FENCE HEIGHT	PRODUCT NUMBER	GABION SPIRAL (C-GSPINDLESS) QUANTITY	9" HOOKS KIT (C-GHKPPK9SS) QUANTITY	4" HOOKS KIT (C-GHK2PK9SS) QUANTITY
4'	C-GFLSQ48K**XX**	7	3	2
6'	C-GFLSQ72K**XX**	8	4	3
8'	C-GFLSQ96K**XX**	9	5	3

XX	FINISH
BK	Black
SP	Special color

NOTE:
THE GABION FENCE LINE USES ONE OF THE GABION FENCE SIDE PANEL TO LINK BOTH GABION FENCES TOGETHER.

FOR MORE INFORMATION ON THESE PANELS, PLEASE REFER TO SPECIFICATIONS.

SYSTÈMES DE CLÔTURES omega II FENCE SYSTEMS

Omega II Fence Systems
1735, Blvd. St-Elzéar West
Laval, Quebec
H7L 3N6

Tel: 450-686-9600
1-800-836-6342
Fax: 450-681-5318
www.omegafence.com

WEB

REVISION : 08/26