OMEGA GABION BENCH LINE WITH ELITE OR EVOLUTION PANELS

4' GABION BENCH

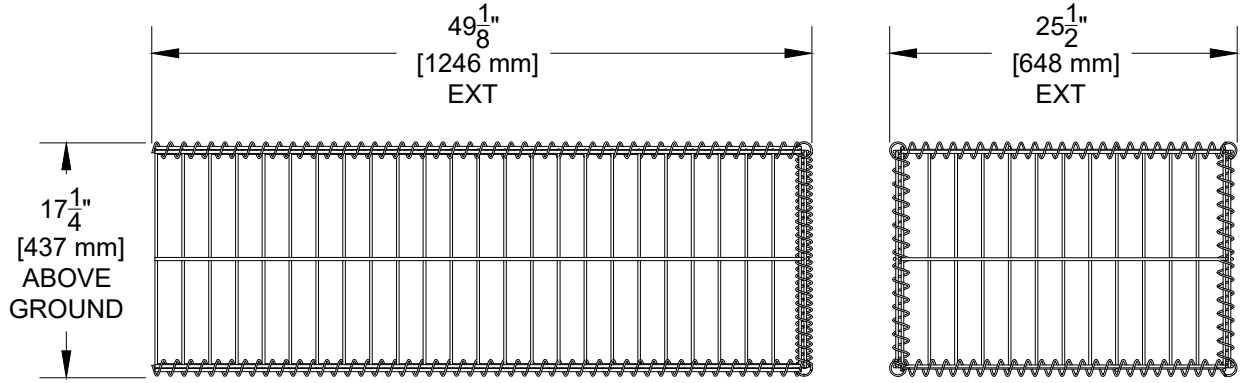

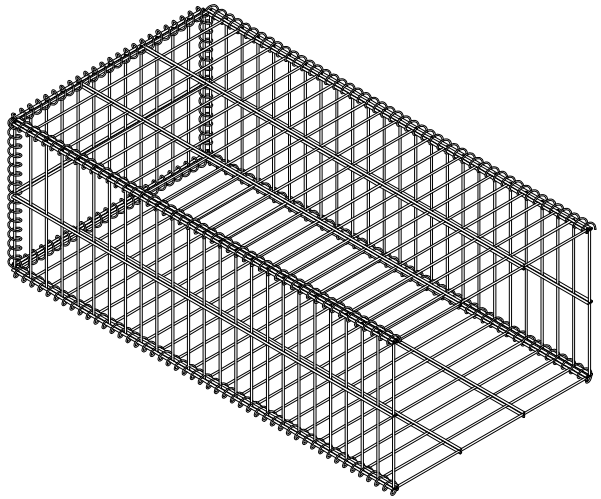

6' GABION BENCH

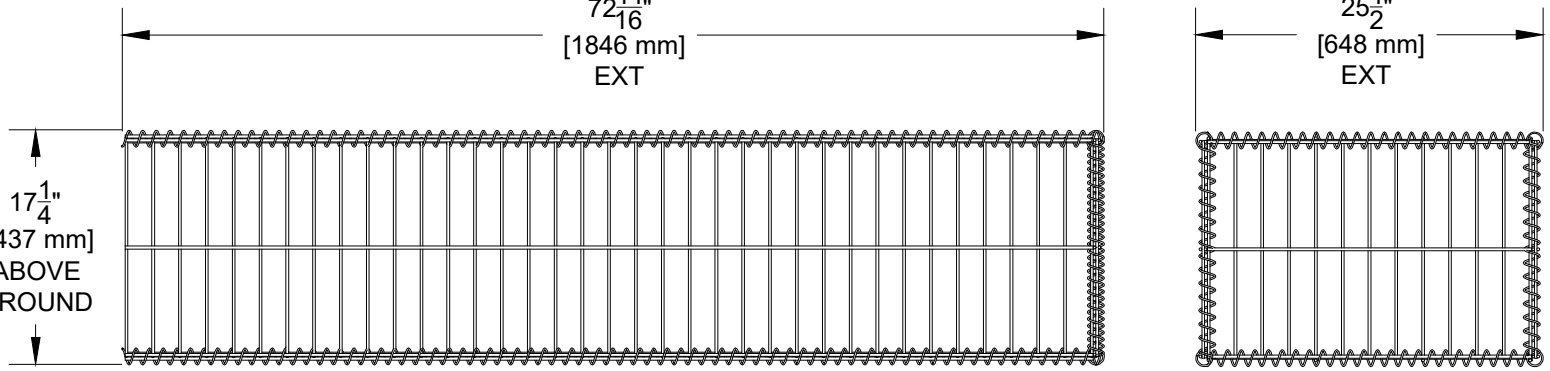

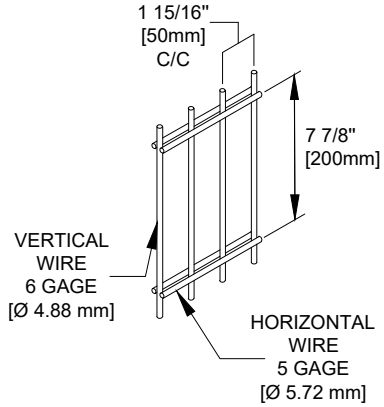

NOTE:
THE GABION BENCH LINE USES ONE OF THE GABION BENCH SIDE PANEL TO LINK BOTH GABION BENCHES TOGETHER.

ELITE PANEL: PAINTED FINISH
EVOLUTION PANEL: HOT-DIPPED GALVANIZED FINISH

GABION BENCH WIDTH	PRODUCT NUMBER
4'	C-GBLEL48K**XX**
6'	C-GBLEL72K**XX**

XX	FINISH
BK	Black
SP	Special color
GV	Galvanized

FOR MORE INFORMATION ON THESE PANELS, PLEASE REFER TO SPECIFICATIONS.

SYSTÈMES DE CLÔTURES omega II FENCE SYSTEMS

Omega II Fence Systems
1735, Blvd. St-Elzéar West
Laval, Quebec
H7L 3N6

Tel: 450-686-9600
1-800-836-6342
Fax: 450-681-5318
www.omegafence.com

WEB

REVISION : 09/26