OMEGA GABION BENCH LINE WITH SQUARE MESH PANELS

4' GABION BENCH

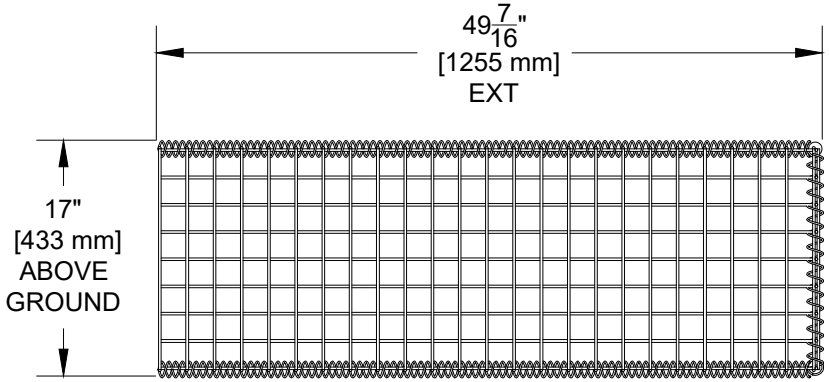

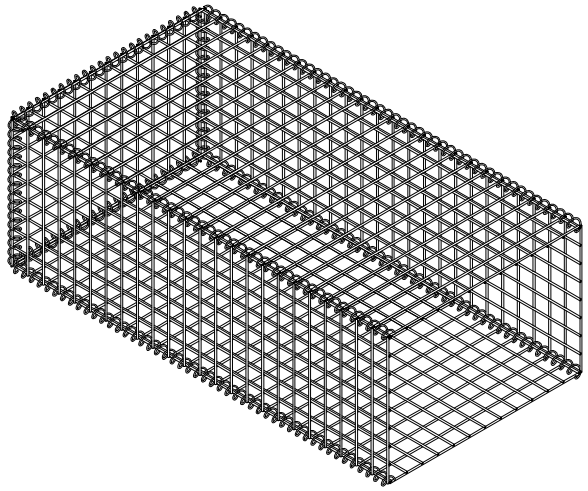

6' GABION BENCH

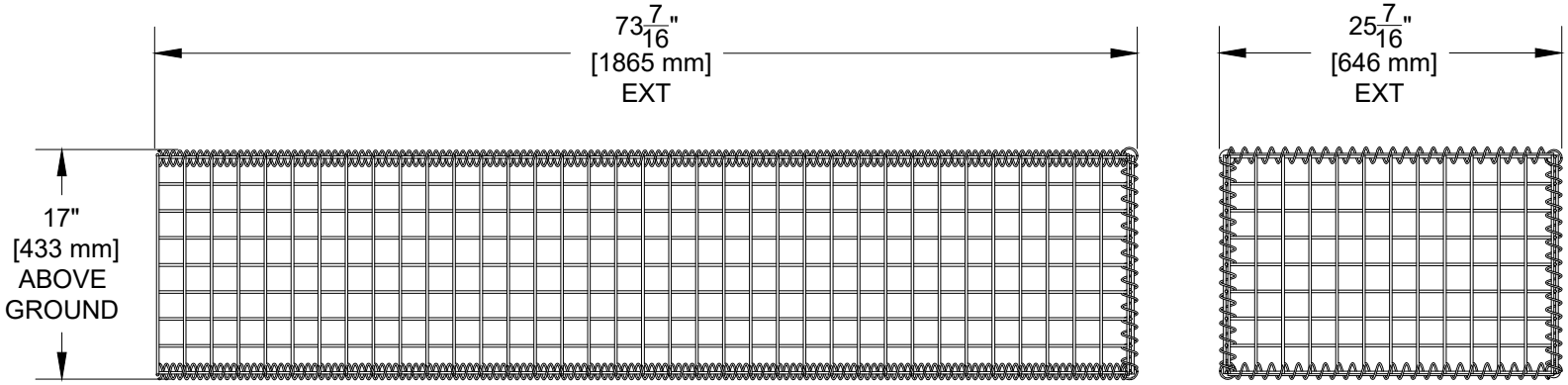

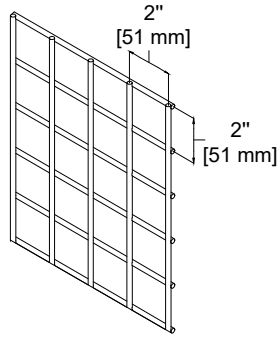

GABION BENCH WIDTH	PRODUCT NUMBER
4'	C-GBLSQ48K**XX**
6'	C-GBLSQ72K**XX**

XX	FINISH
BK	Black
SP	Special color

NOTE:
THE GABION BENCH LINE USES ONE OF THE GABION BENCH SIDE PANEL TO LINK BOTH GABION BENCHES TOGETHER.

FOR MORE INFORMATION ON THESE PANELS, PLEASE REFER TO SPECIFICATIONS.

SYSTÈMES DE CLÔTURES omega II FENCE SYSTEMS

Omega II Fence Systems
1735, Blvd. St-Elzéar West
Laval, Quebec
H7L 3N6

Tel: 450-686-9600
1-800-836-6342
Fax: 450-681-5318
www.omegafence.com

WEB

REVISION : 09/26