GABION BENCH – SINGLE GABION INSTALLATION GUIDE

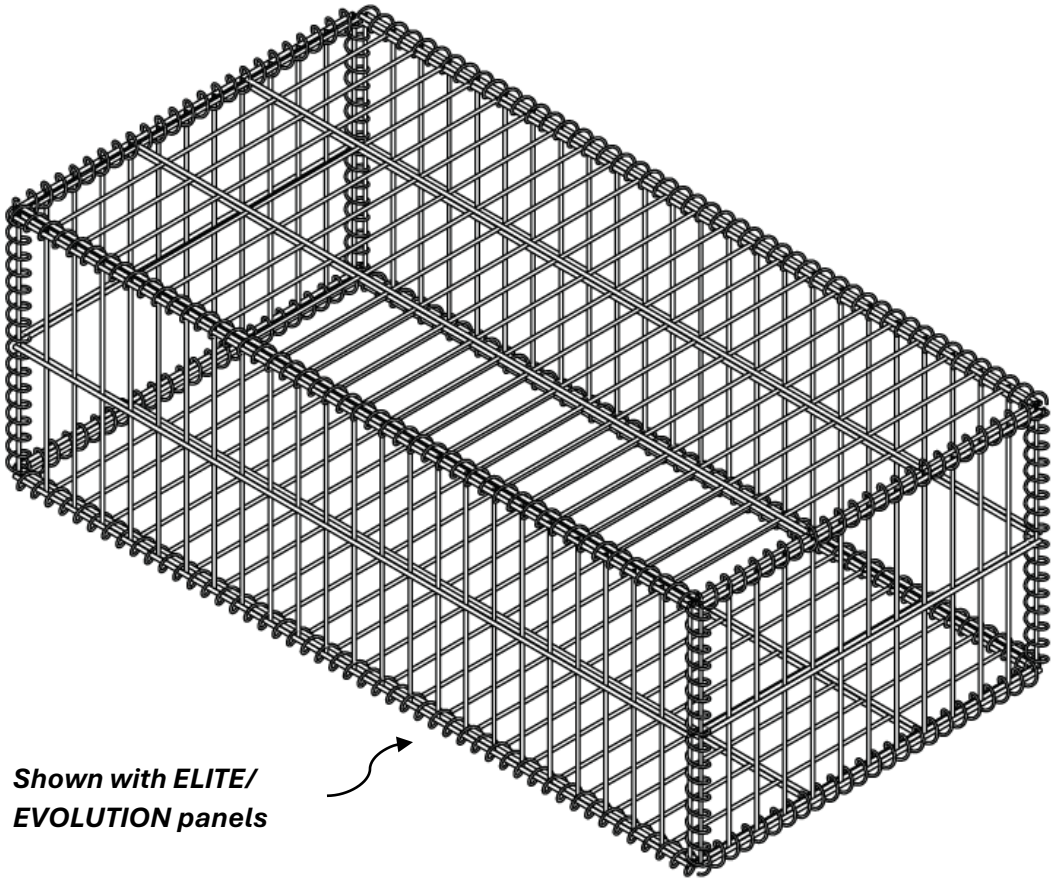

Shown with ELITE/ EVOLUTION panels

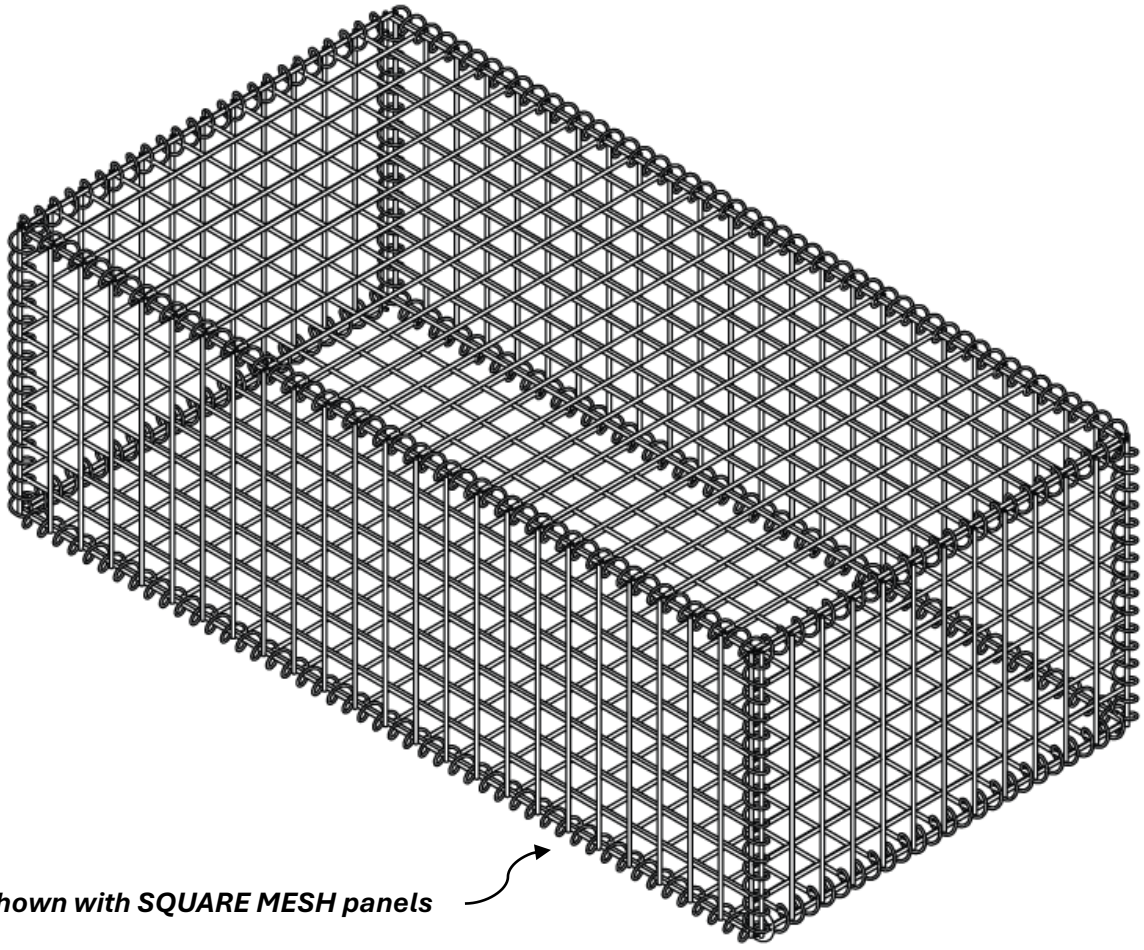

Shown with SQUARE MESH panels

1 GABION BENCH KIT - INCLUDED ITEMS

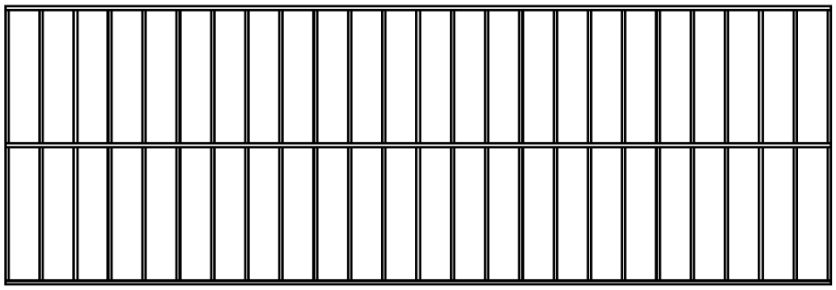

(2x) Front & back panel

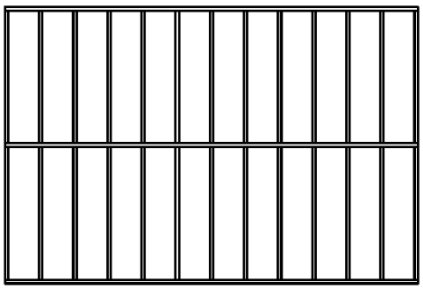

(2x) Side panel

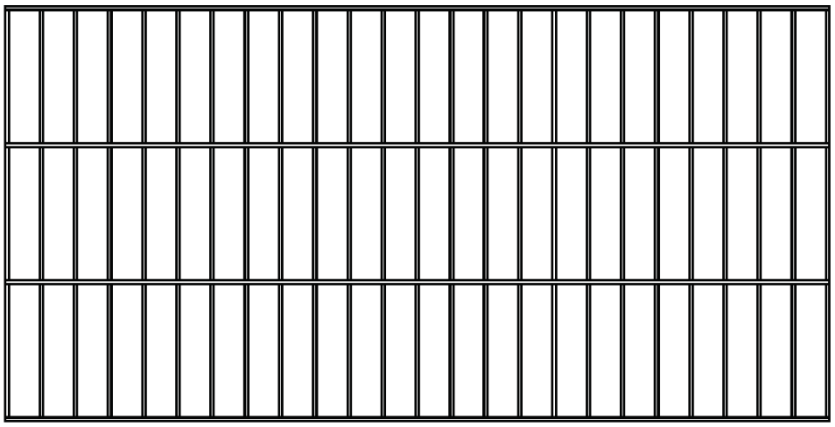

(2x) Top & bottom panel



Spindles

Table 1 : Spindles quantity table

Gabion bench width	Gabion bench codes	Spindles quantity
4’	C-GBEL48K**XX** C-GBSQ48K**XX**	4
6’	C-GBEL72K**XX** C-GBSQ72K**XX**	5

XX	Finish
BK	Black
SP	Special color
GV	Galvanized (EVOLUTION only)

2 GABION PANELS ASSEMBLY

2.1 Gabion bench bottom installation.

Ensure that the terrain is leveled and compacted. Cut the spindles at the desired length and connect the bottom panel to the face panel, back panel and the side panels.

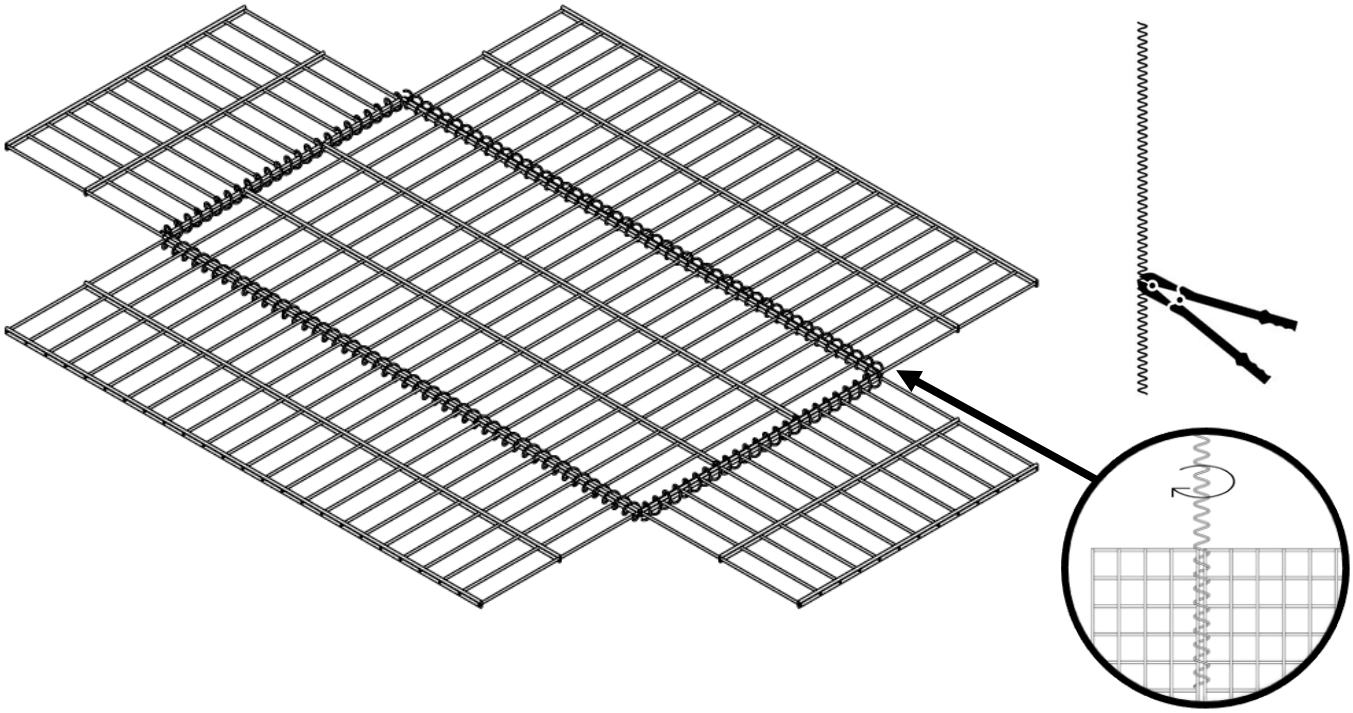

2.2 Gabion bench lateral panels installation

Cut the spindles at the desired length and connect the face panel, back panel and side panels to each other.

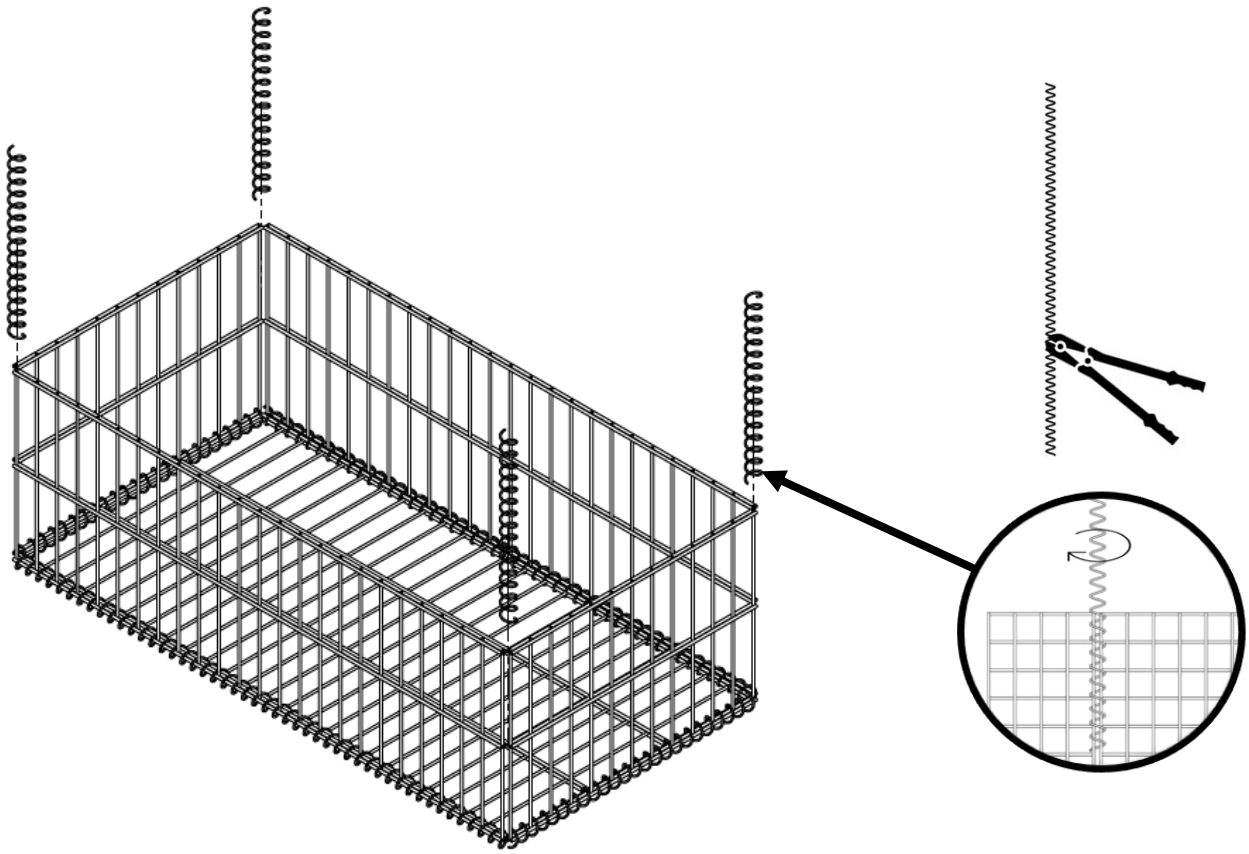

2.3 Gabion bench infill insertion

The gabion bench can now be packed with infill up to the top of the box.

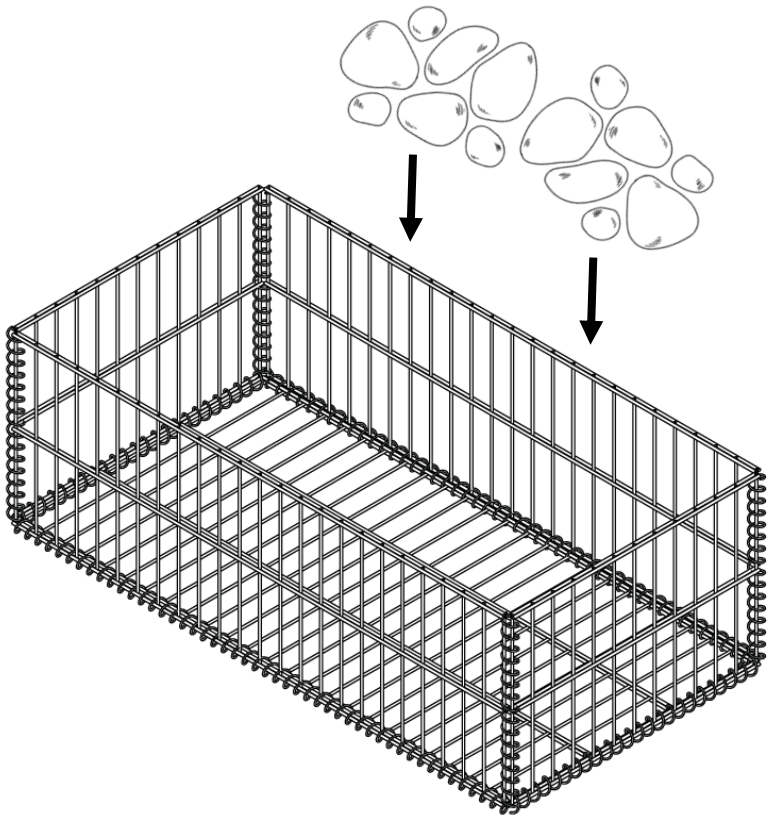

2.4 Gabion bench top panel installation

Cut the spindles at the desired length and connect the top panel to the front panel, back panel and side panels to complete the gabion bench assembly.

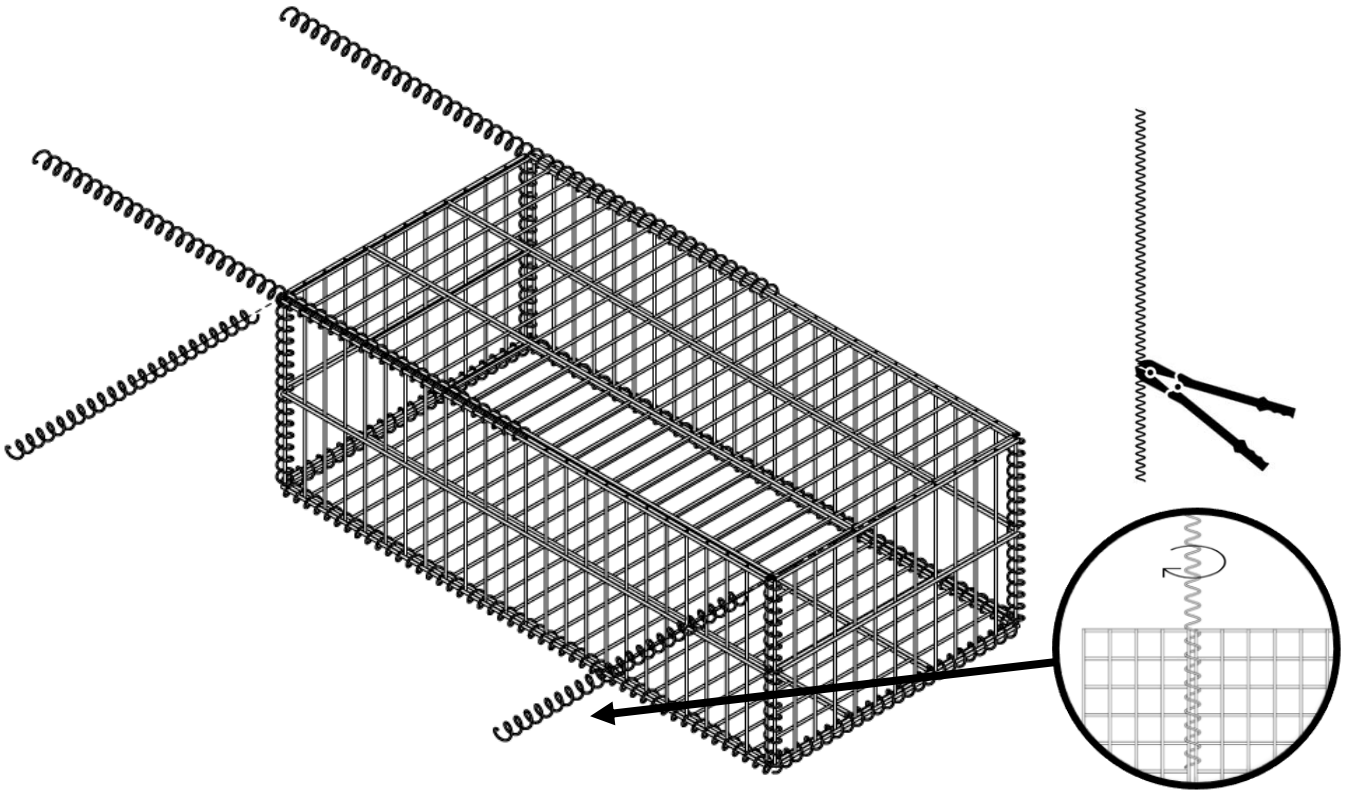

GABION BENCH – MULTIPLE GABION INSTALLATION GUIDE

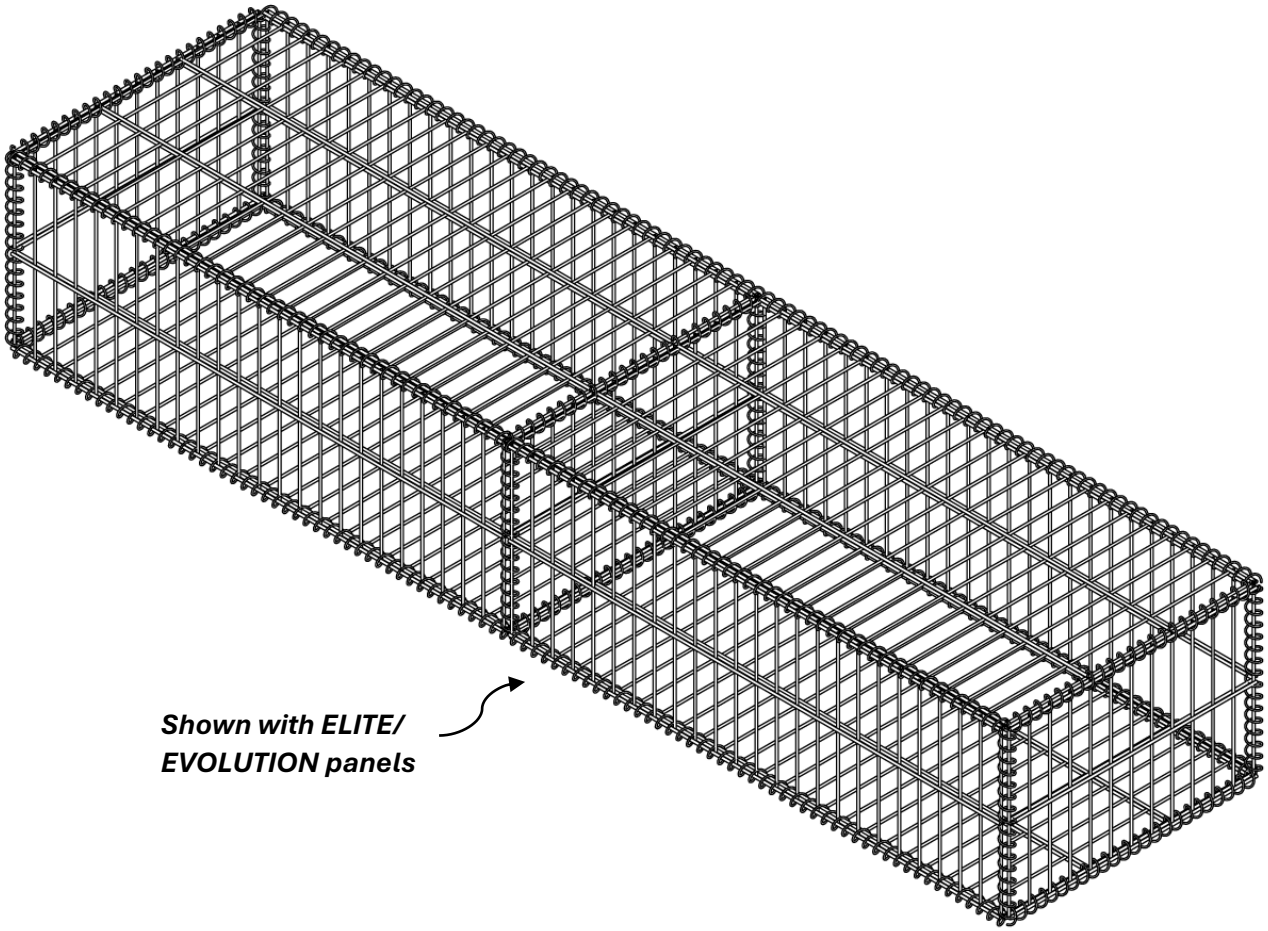

Shown with ELITE/ EVOLUTION panels

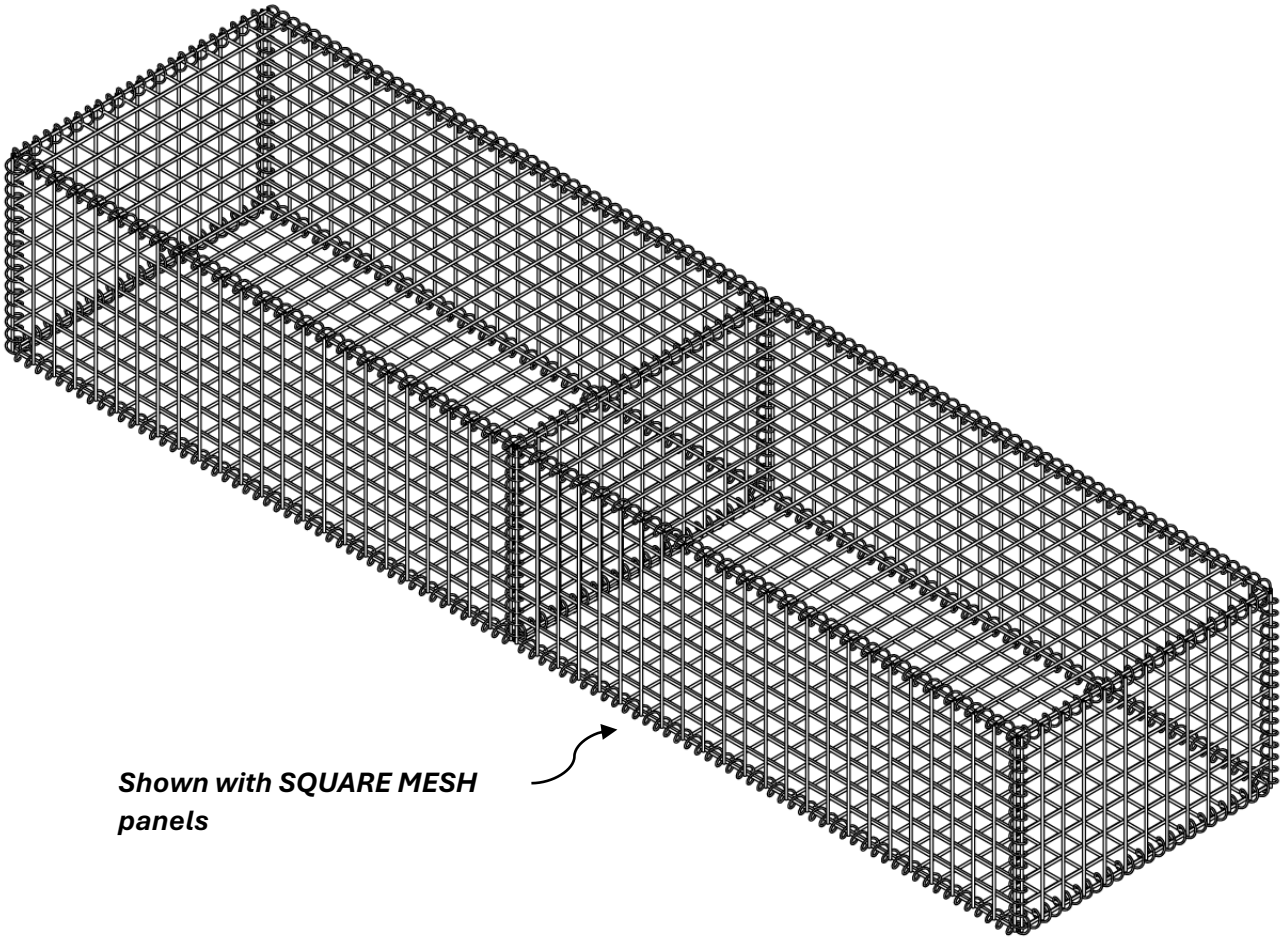

Shown with SQUARE MESH panels

1 GABION BENCH LINE KIT - INCLUDED ITEMS

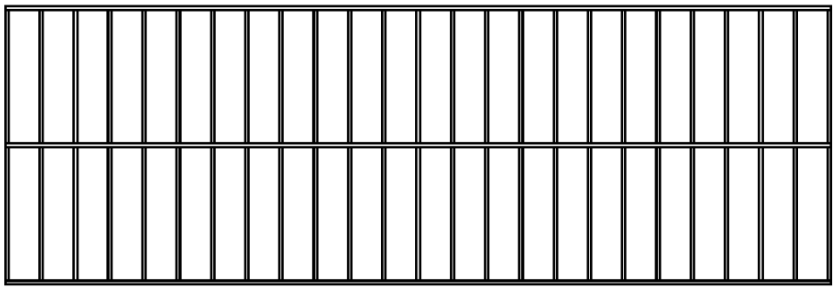

(2x) Front & back panel

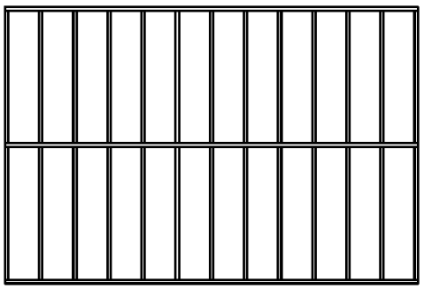

(1x) Side panel

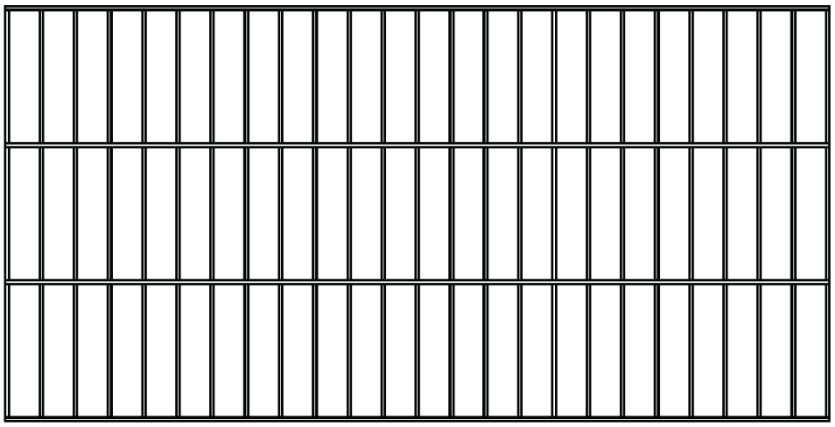

(2x) Top & bottom panel



Spindles

Table 1 : Spindles quantity table

Gabion bench width	Gabion bench codes	Spindles quantity
4’	C-GBLEL48K**XX** C-GBLSQ48K**XX**	4
6’	C-GBLEL72K**XX** C-GBLSQ72K**XX**	5

XX	Finish
BK	Black
SP	Special color
GV	Galvanized (EVOLUTION only)

2 GABION PANELS ASSEMBLY

2.1 Gabion bench bottom installation

For each gabion bench, cut the spindles at the desired length and connect the bottom panel to the face panel, back panel and to the side panel that do not link the gabion benches.

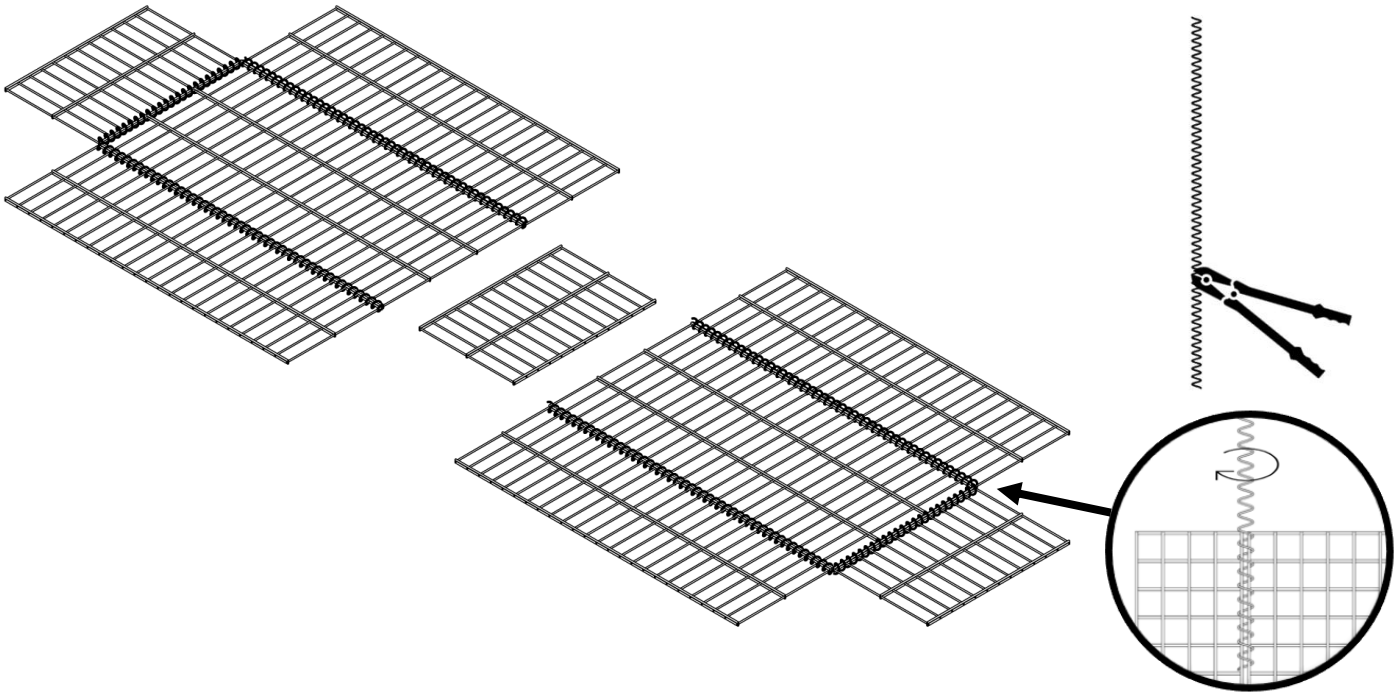

2.2 Gabion bench linking side panel installation

Cut the spindle at the desired length and connect the gabion benches together using the linking side panel.

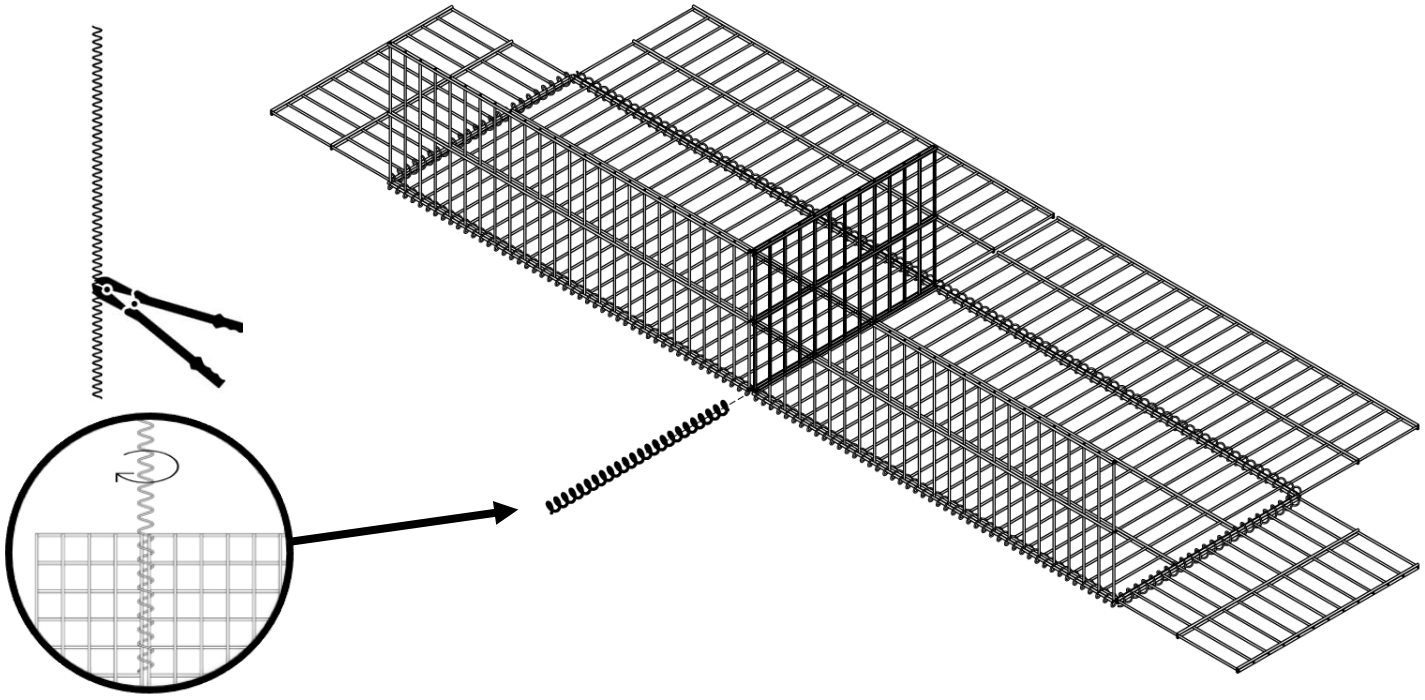

2.3 Gabion bench lateral panels installation

Cut the spindles at the desired length and connect the face panels, back panels and the side panels to each other using the spindles.

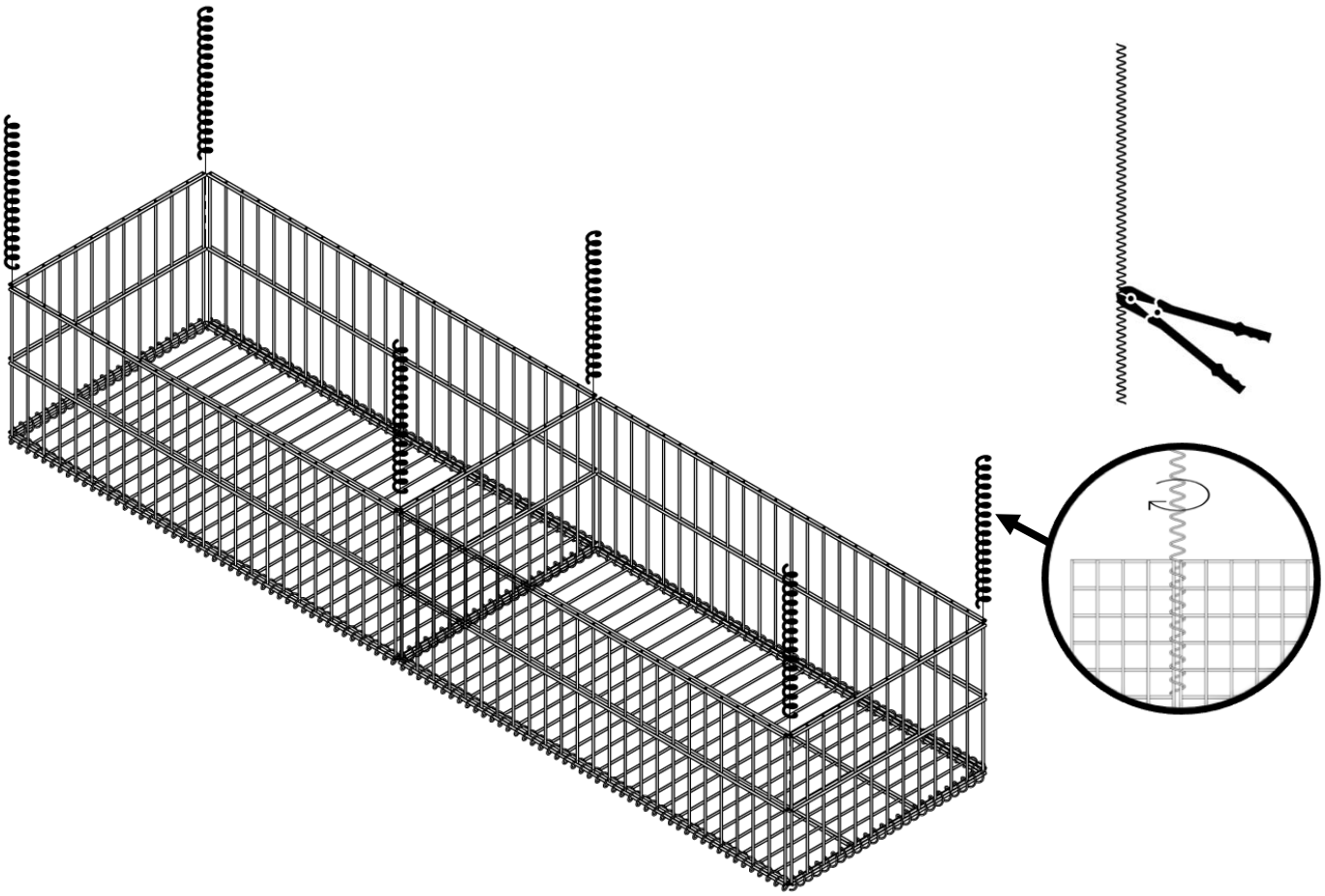

2.4 Gabion bench infill insertion

The gabion benches can now be packed with the desired infill up to the top.

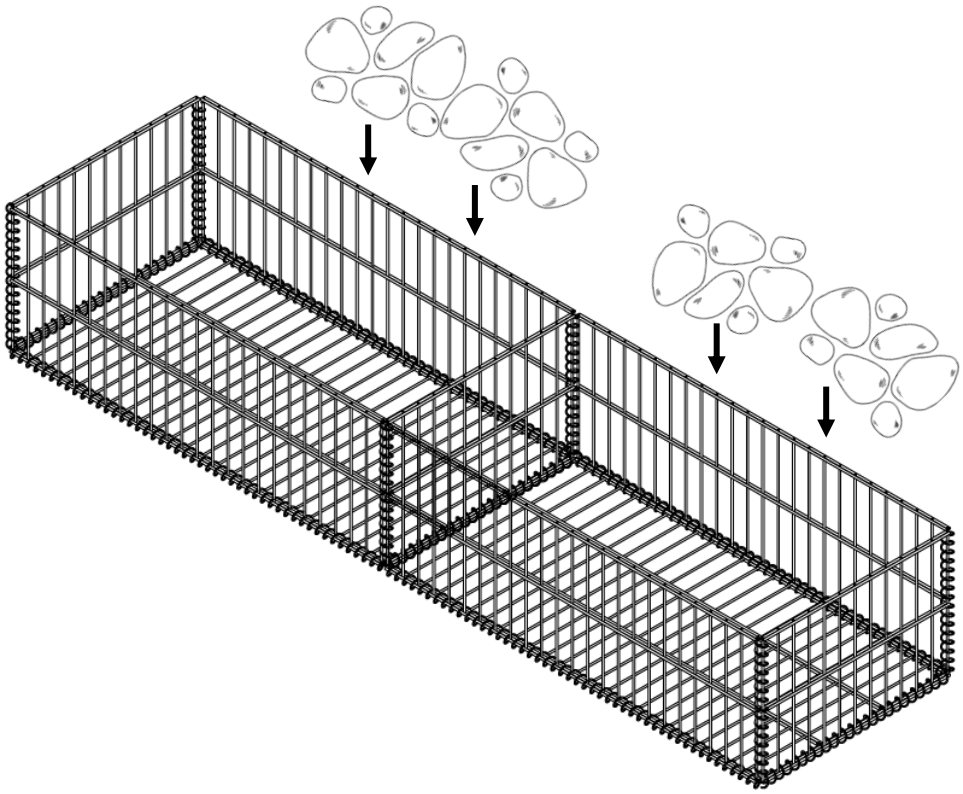

2.5 Gabion bench top panel installation

Cut the spindles at the desired length and connect the linking side panel to both top panels. Then, connect the top panel to the front panel, back panel and to the other side panels to complete the gabion bench assembly.

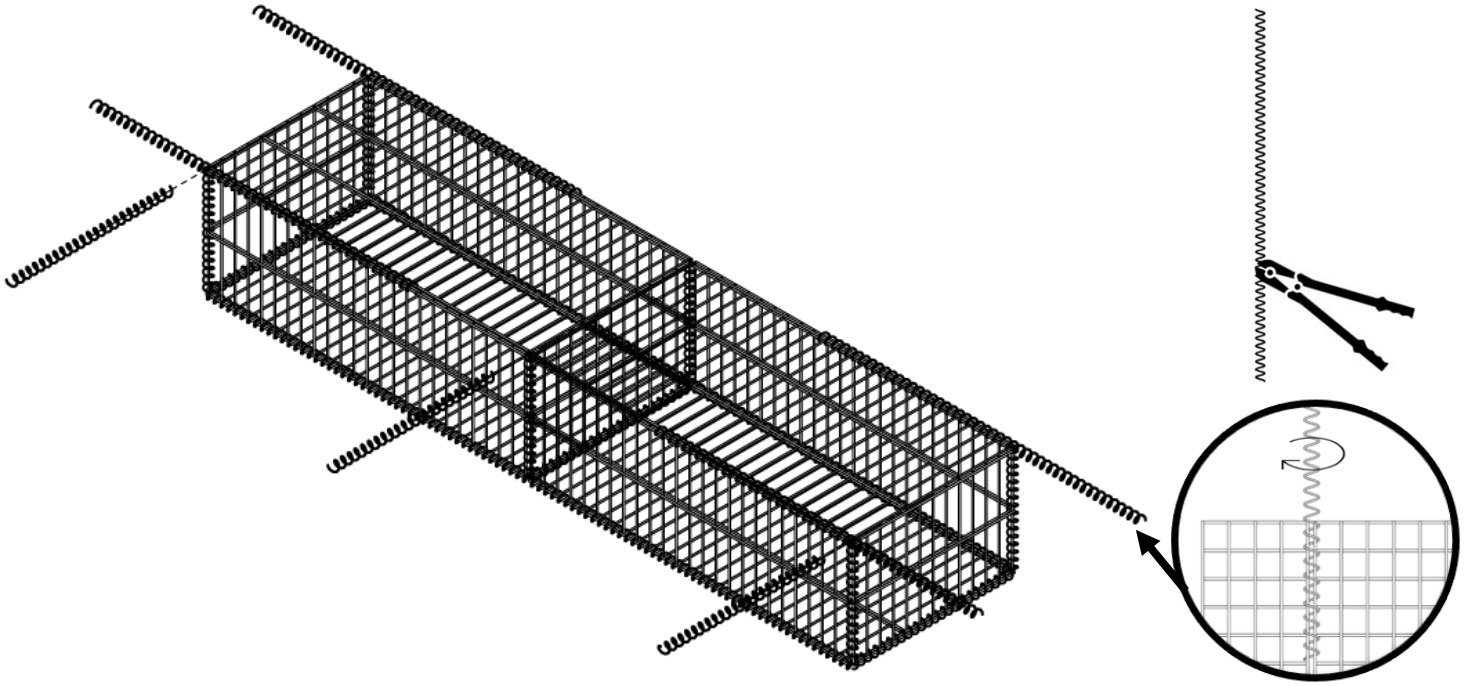

2.6 The Gabion bench is now completed

